MV25x-10,16-V

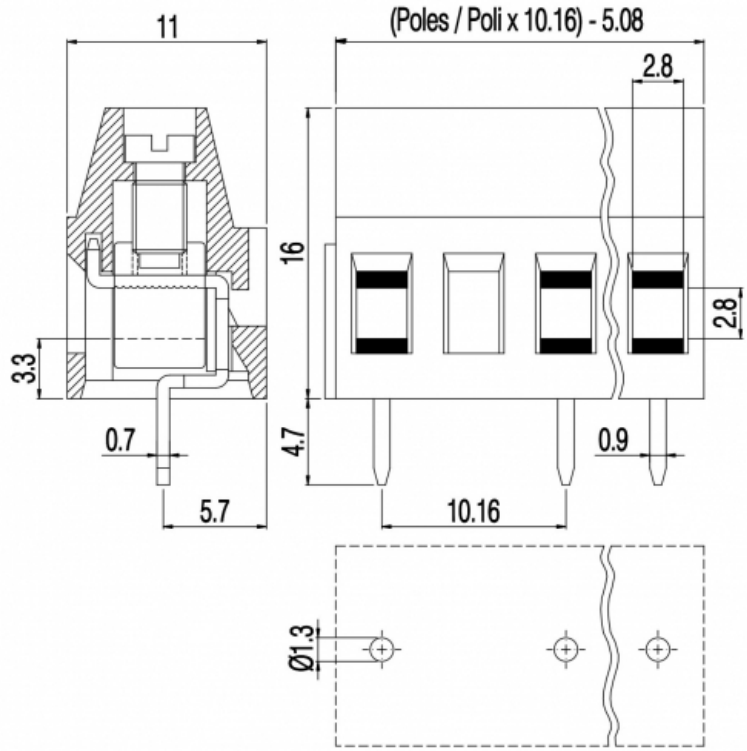

Single-deck terminal block - Modular version - Pitch 10,16mm - 1/2/4 poles

GENERAL INFORMATION

pitch:	10,16 mm
housing height:	16,00 mm
housing depth:	11 mm
dimensional class:	medium
wire section:	2.5 mm² / 14 AWG
clamp opening size:	2.8 × 2.8 mm
wire stripping:	max 8 mm
operating temperature:	-40°C ÷ +130°C

ELECTRICAL CHARACTERISTICS

current:	16A
voltage:	750V
test voltage:	3 kVrms/60s

MECHANICAL CHARACTERISTICS

screw:	M3
recommended torque:	0.5÷0.55 Nm / 4.5÷4.9 in.lbs

APPROVALS DATA

	CSV	VDE	cULus
	EN 60998-1	EN 60998-1	UL 1059
current:	16A	16A	16A factory / 15A field
voltage:	750V	750V	300V
wire section:	2.5mm ^{2}	2.5mm ^{2}	14÷30AWG
torque:	0.5Nm	0.5Nm	4.5Lb-in
FILE:	EP149	40023956	E178356

Copyright ©2021 - euroclamp - http://www.euroclamp.it

MATERIALS

housing:	PA - UL 94 V0
screw:	Galvanized steel
clamp/spring:	Nickeled copper alloy
terminal:	Tin-plated copper alloy

AVAILABLE COLOURS

GN (STD) GY BK BL RD OG

other colours: upon request

poles	P/N	pcs/pack	W [Kg]*	W [Kg]*
1	MV251-10,16-V	N/A	N/A	N/A
2	MV252-10,16-V	N/A	N/A	N/A
4	MV254-10,16-V	N/A	N/A	N/A
..	MV25..-10,16-V	N/A	N/A	N/A

Copyright ©2021 - euroclamp - http://www.euroclamp.it