PVxx-3,5-V-P

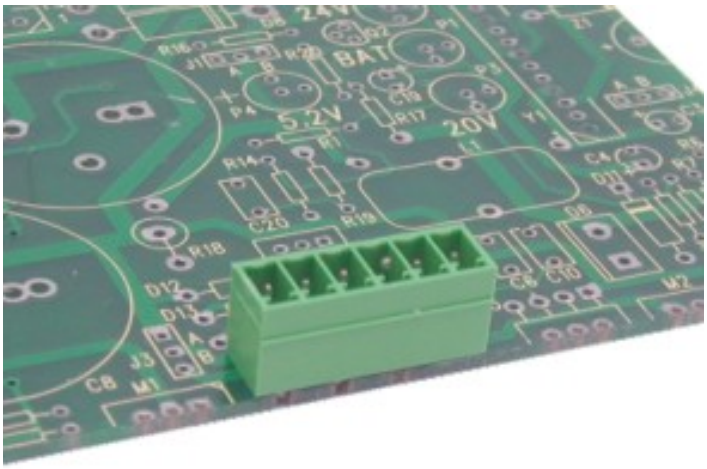

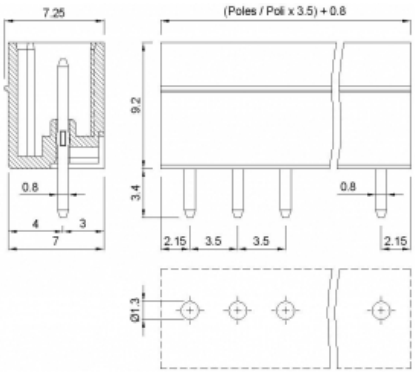

Male plug-in connector - Closed ended version - Pitch 3,5mm - Poles 02÷24

GENERAL INFORMATION	
pitch:	3,5 mm
housing height:	9,20 mm
housing depth:	7.25 mm
dimensional class:	slow
wire section:	-
clamp opening size:	
wire stripping:	-
operating temperature:	-40°C ÷ +130°C

ELECTRICAL CHARACTERISTICS	
current:	11A
voltage:	160V
impulse voltage:	2.5 kV

MECHANICAL CHARACTERISTICS	
-	-

APPROVALS DATA

	-	EN 61984	UL 1059
current:	-	11A 2÷3 poli 9A 4÷24 poli	11A factory / 11A field
voltage:	-	160V	300V
FILE:	-	40048261	E178356

MATERIALS	
housing:	PA - UL 94 V0
screw:	n/a
clamp/spring:	n/a
terminal:	Tin-plated copper alloy

AVAILABLE COLOURS

GN (STD) GY BK BL RD YL OG

other colours: upon request

poles	P/N	pcs/pack	W [Kg]*	W [Kg]*
02	PV02-3,5-V-P	N/A	N/A	N/A
03	PV03-3,5-V-P	N/A	N/A	N/A

Copyright ©2021 - euroclamp - http://www.euroclamp.it

04	PV04-3,5-V-P	N/A	N/A	N/A
05	PV05-3,5-V-P	N/A	N/A	N/A
06	PV06-3,5-V-P	N/A	N/A	N/A
07	PV07-3,5-V-P	N/A	N/A	N/A
08	PV08-3,5-V-P	N/A	N/A	N/A
09	PV09-3,5-V-P	N/A	N/A	N/A
10	PV10-3,5-V-P	N/A	N/A	N/A
11	PV11-3,5-V-P	N/A	N/A	N/A
12	PV12-3,5-V-P	N/A	N/A	N/A
13	PV13-3,5-V-P	N/A	N/A	N/A
14	PV14-3,5-V-P	N/A	N/A	N/A
15	PV15-3,5-V-P	N/A	N/A	N/A
16	PV16-3,5-V-P	N/A	N/A	N/A
17	PV17-3,5-V-P	N/A	N/A	N/A
18	PV18-3,5-V-P	N/A	N/A	N/A
19	PV19-3,5-V-P	N/A	N/A	N/A
20	PV20-3,5-V-P	N/A	N/A	N/A
21	PV21-3,5-V-P	N/A	N/A	N/A
22	PV22-3,5-V-P	N/A	N/A	N/A
23	PV23-3,5-V-P	N/A	N/A	N/A
24	PV24-3,5-V-P	N/A	N/A	N/A

Copyright ©2021 - euroclamp - http://www.euroclamp.it